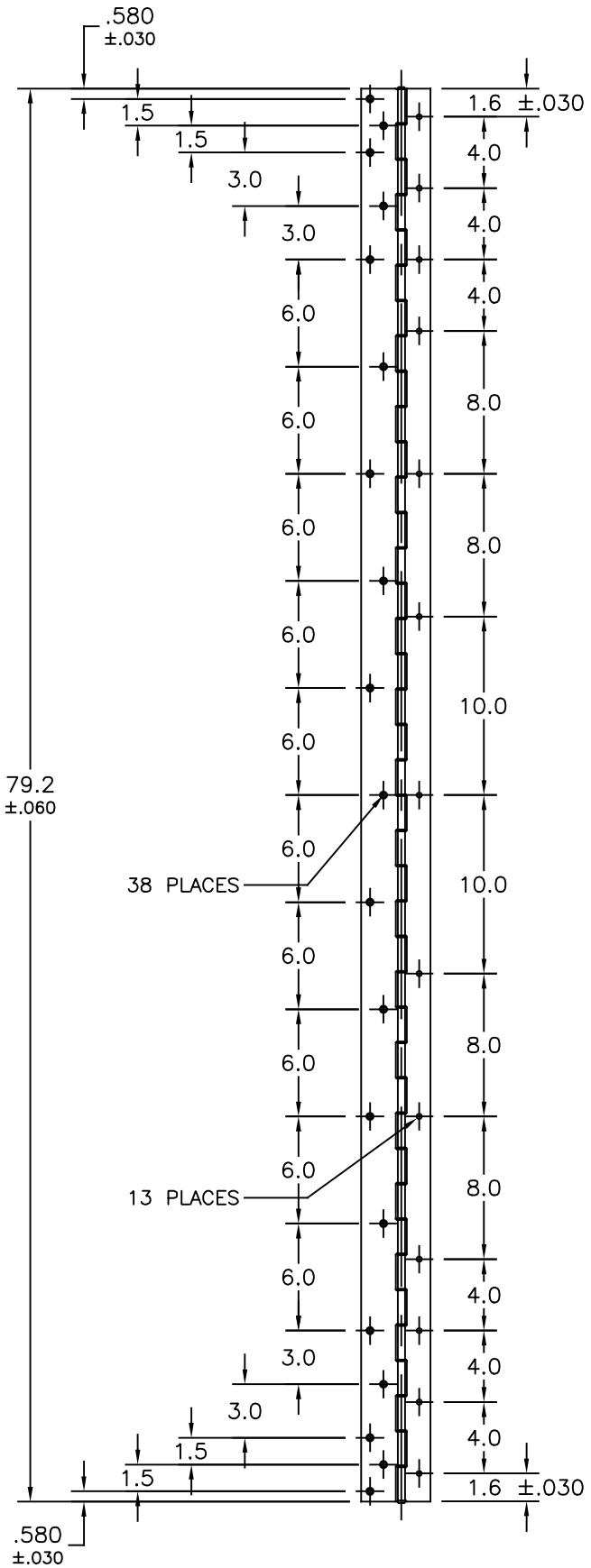

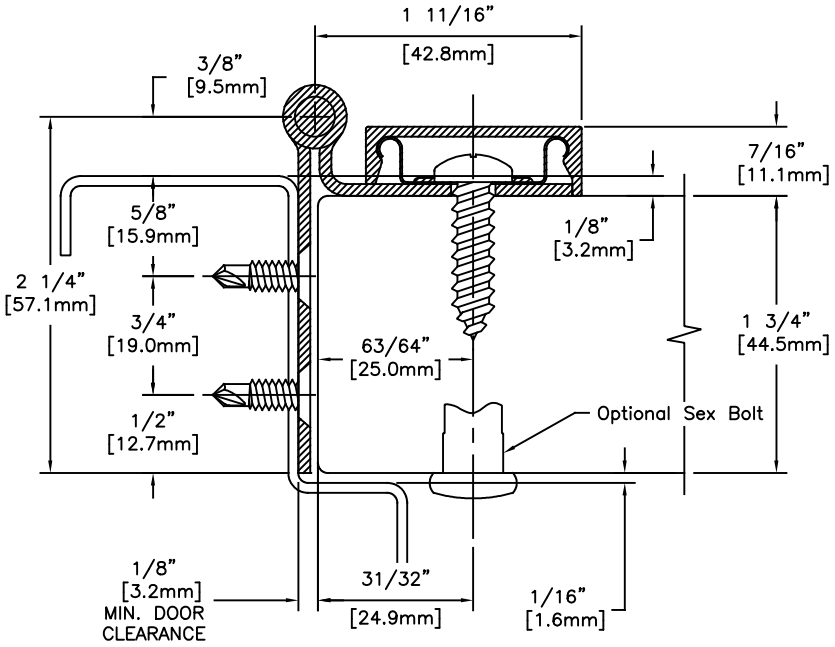

APPLICATION

SCALE: 3/4

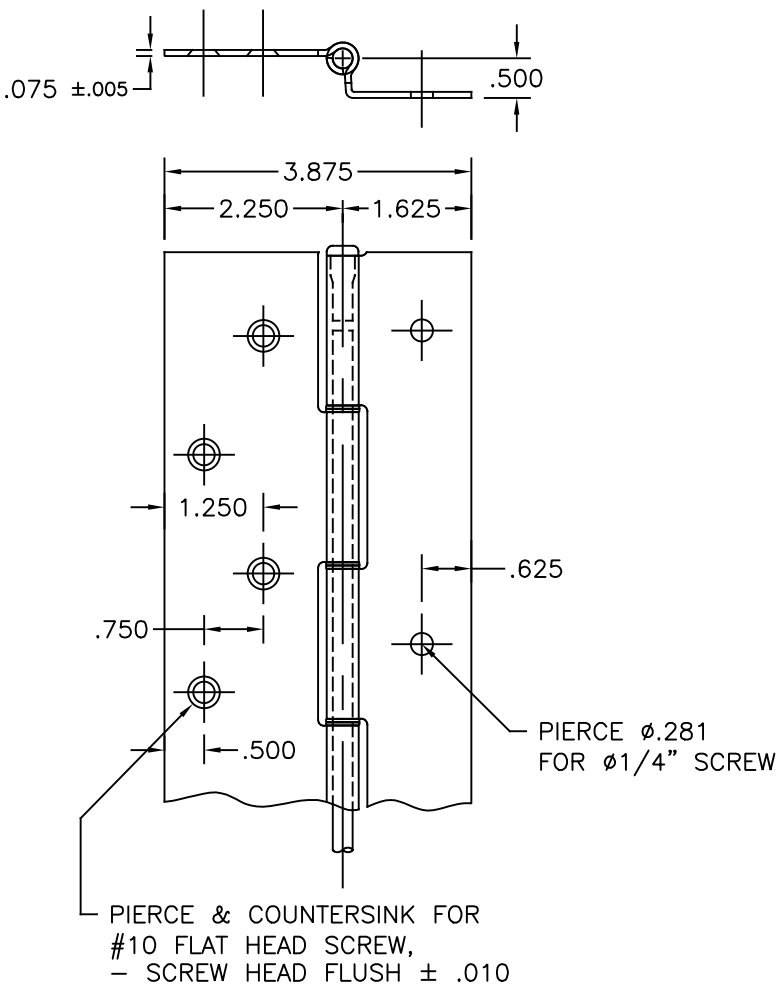

HOLE PATTERN DETAIL

SCALE: 3/8

NOTES:

- MATERIAL: .075 STAINLESS STEEL #304–2B FINISH
- ALL DIMENSIONS ARE IN INCHES
- DRAWINGS ARE NOT TO SCALE
- KNUCKLE PATTERN MY VARY

DET	QTY	SH	STOCK SIZE	MAT'L	REMARKS

Bill of Material

TOLERANCE (UNLESS NOTED)
.X = ± .060
.XX = ± .030
.XXX = ± .015
ANGLE = ± 2°
FRACTION = ± 1/32

REMOVE ALL BURRS
BREAK SHARP EDGES .010 MAX

REVISIONS

HAGER COMPANIES
HAGER PLAZA
P.O. BOX 3285
GADSDEN, ALABAMA 35903

HAGER – MODEL 790–903 – 79"
CONTINUOUS STAINLESS STEEL HINGE

DATE 06-17-03 | DR. KBJ | SCALE AS NOTED
FILENAME z:\stainless\templates\790903-79.dwg
DRAWING NO. 790–903 – 79"